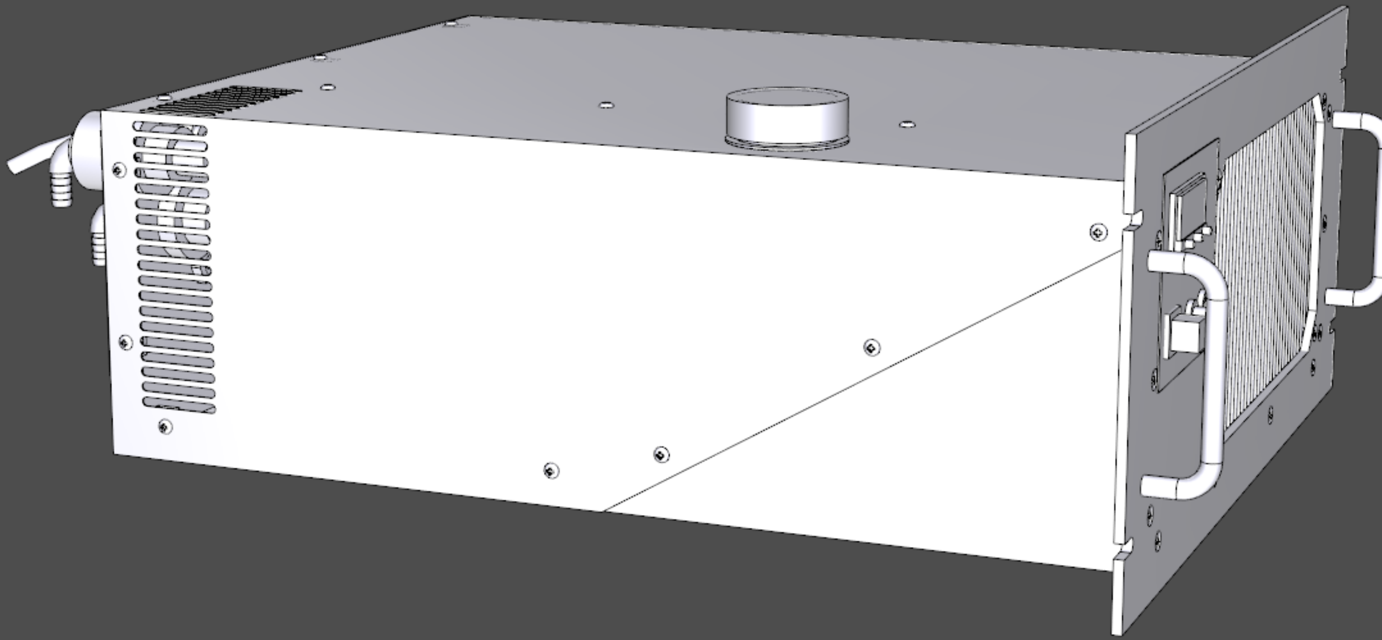

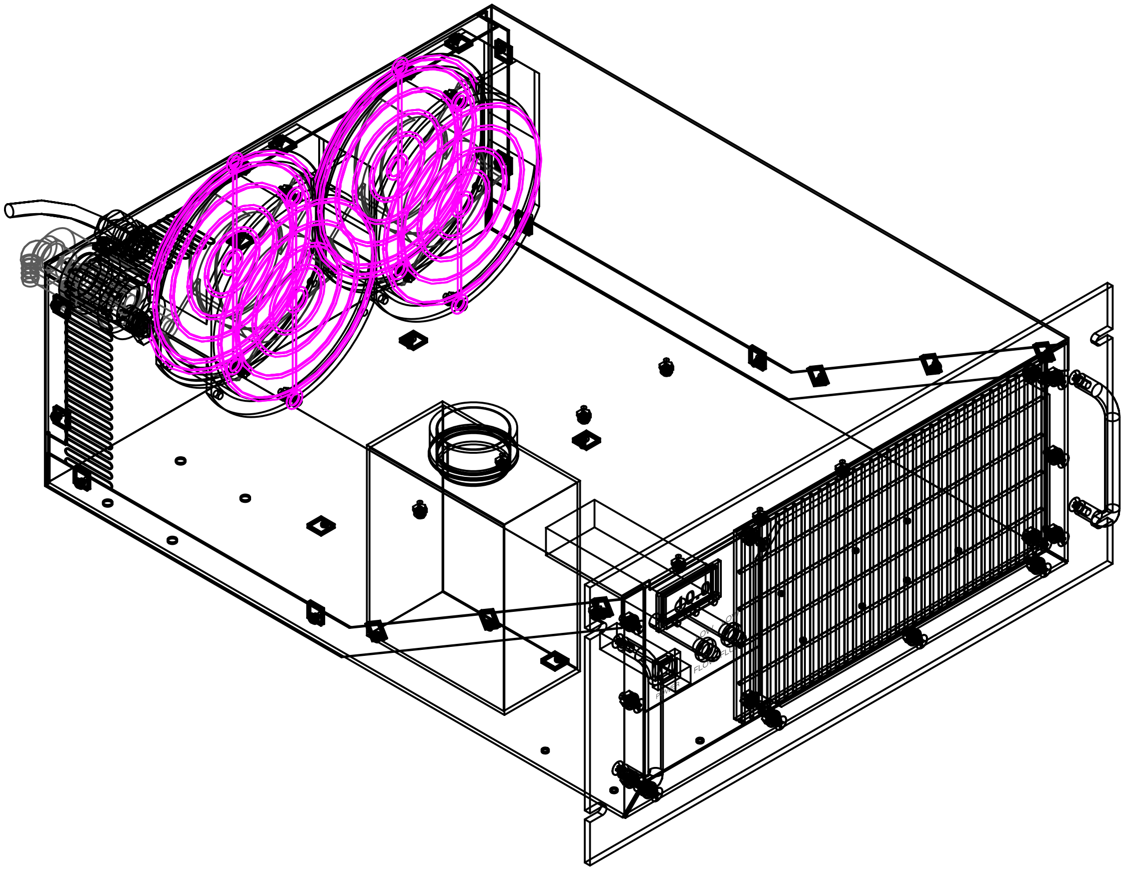
40.0
FLOW
FLOW
POWER