Product Information Packet

Model AHP-1200CP

Solid State Cold Plate

without Temperature Control

Part #1-3090-0-000

Thank you for your purchase. Information has been enclosed regarding the installation, specifications, and wiring of your solid-state assembly.
Please read and follow all instructions carefully before installation. Only qualified technicians should install this equipment.

If you have any questions regarding your equipment, please do not hesitate to call us at 773-342-4900, and we will be happy to assist you. We are open from 8:30 am-4:30 pm Central Time.

Included in this packet you will find:

Installation Notes for Air Conditioners

Product Literature and Specifications

Assembly Drawing # 1200-A-A249

Wiring Drawing # 1202-B-E46

Installation Drawing # 1200-B-F56

Warranty Information

teca

ThermoElectric Cooling America Corporation
4048 W. Schubert Avenue • Chicago, IL (U.S.A.) 60639
Ph: 773/342-4900 Fx: 773/342-0191
sales@thermoelectric.com www.thermoelectric.com

AHP-1200CP | Solid-State Cold Plate

Air Cooled
Flush Mount
Nema-12

FEATURES

- Direct contact cooling as much as 48 °C below room temperature
- Weighs only 19 lbs. (8.6 kg)
- Compact bench top units
- No compressor, fluorocarbons or filters
- Virtually maintenance-free operation
- Stainless steel exterior housing
- Integral temperature controller option (shown)
- Mounts in any orientation

INCLUDES

- Integral power supply (120 VAC input)
- Cold plate mounting taps
- Rubber feet
- Power input cord

APPLICATIONS

Cooling of components, processors, and various assemblies and products.

Shown above is the AHP-1200CPHC with integral TC-3300 temperature control.

SPECIFICATIONS

MODEL	PART NUMBER	NOTES	PERFORMANCE RATING BTU/HR	VOLTAGE VAC 50/60 HZ	CURRENT AMPS.	WEIGHT LBS. (KG)	TEMP. CONTROL *	OPERATING AMBIENT °C
AHP-1200CP	1-3090-0-000	Cool only	830-950	120	4.0	18(8.2)	None	-10/+70
AHP-1200CP	1-3050-0-000	Cool only	830-950	120	4.0	18(8.2)	OPT*	-10/+70
AHP-1200CP	1-30D0-0-000	Cool only	830-950	120	4.0	19(8.6)	TC-3300^	-10/+70
AHP-1200CPHC	1-3050-1-000	Heat/Cool	830-950	120	4.0	18(8.2)	OPT*	-10/+70
AHP-1200CPHC	1-30D0-1-000	Heat/Cool	830-950	120	4.0	19(8.6)	TC-3300^	-10/+70
AHP-1202CP	1-3092-0-000	Cool only	830-950	240	2.5	23(10.5)	None	-10/+70
AHP-1202CP	1-3052-0-000	Cool only	830-950	240	2.5	23(10.5)	OPT*	-10/+70
AHP-1202CPHC	1-3052-1-000	Heat/Cool	830-950	240	2.5	23(10.5)	OPT*	-10/+70

*OPT; Unit is setup for TC-3300 controller (or similar). Controller not included.

^TC-3300 Temperature controller is integral (built in).

AHP-1200CP

ENVIRONMENTS

Bench top
Laboratory
Industrial

COOLING CAPACITY

260 Watts @ 0 °C ΔT

Model AHP-1200CP is TECA'S largest air cooled cold plate.

PERFORMANCE CURVE

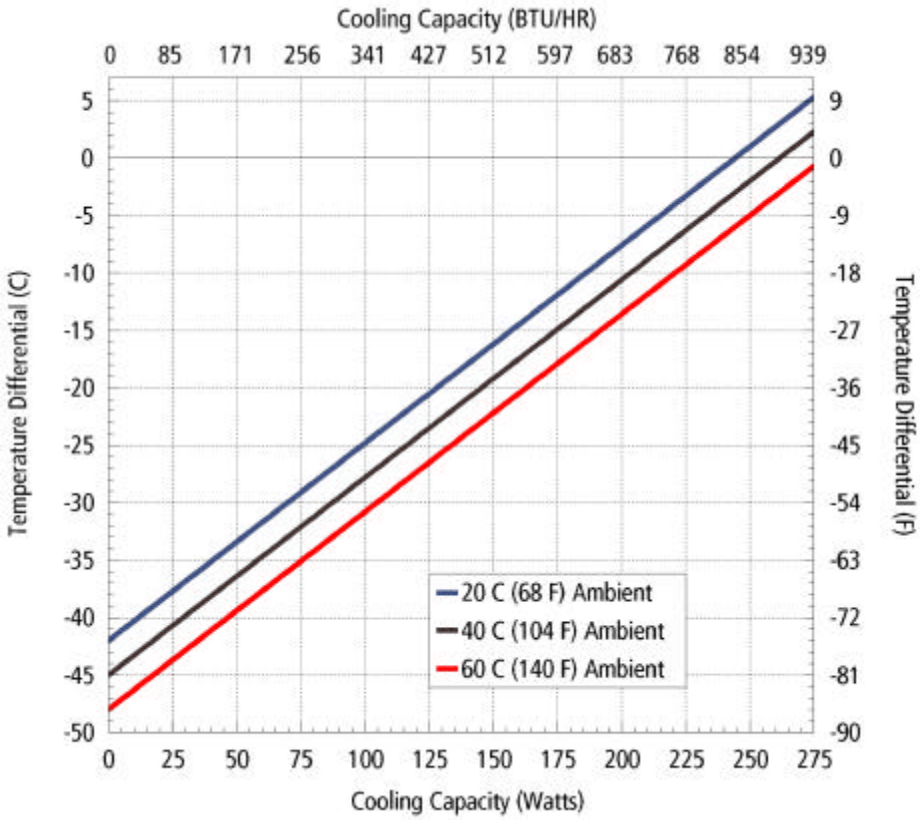

Equation of line: y=ΔT(°C) x=Capacity (Watts)			
Ambient Temp	20°C	40°C	60°C
Cold Plate	y=.172x-44.0	y=.172x-45.0	y=.172x-48.0

DIMENSIONS

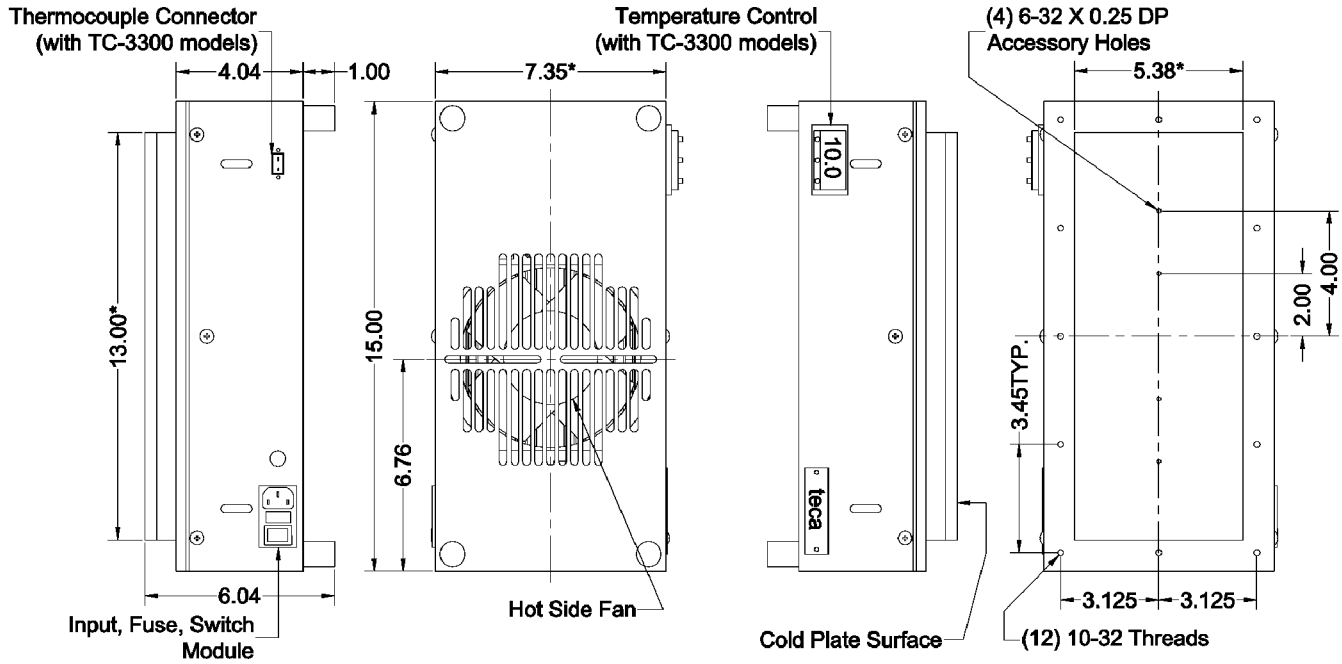

* Dimension does not include hardware, insulation.
Dimension: Inches

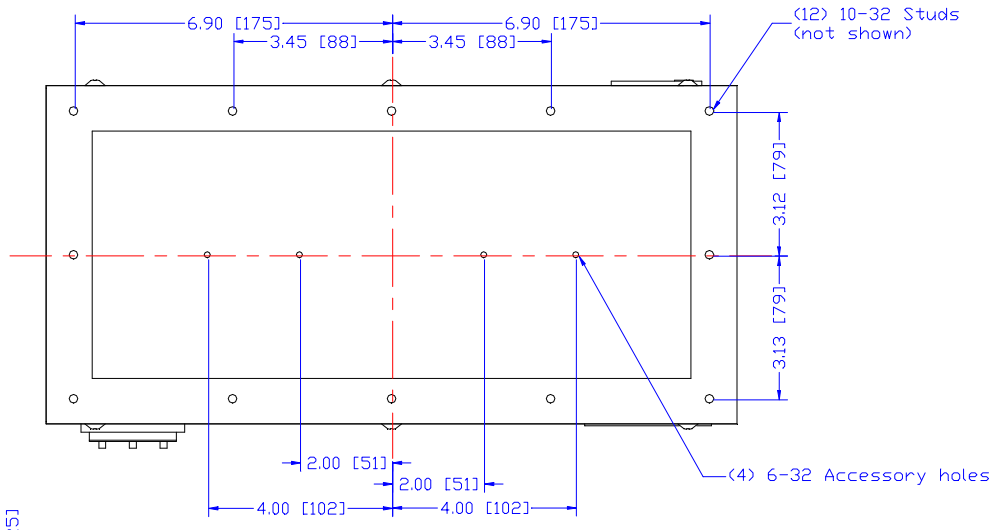

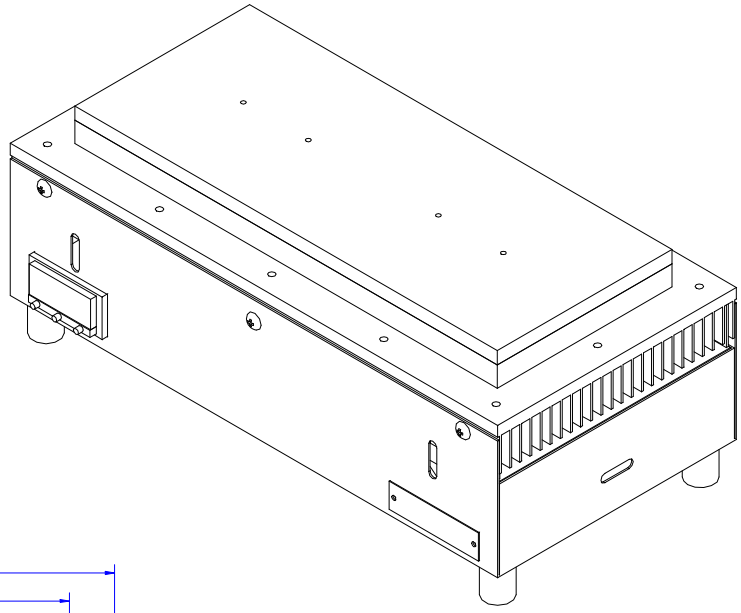

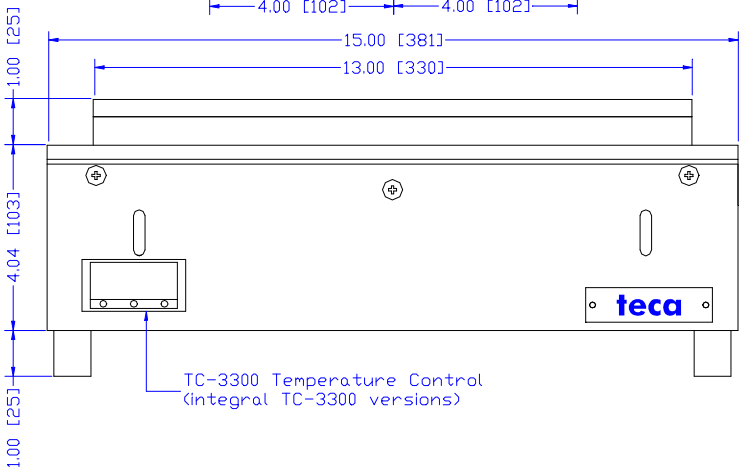

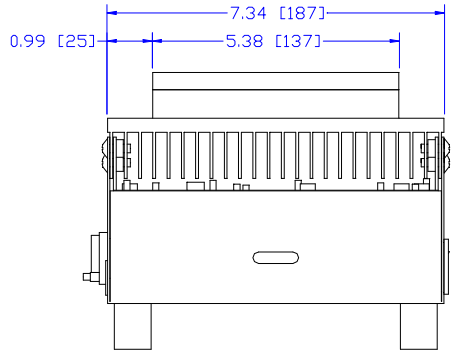

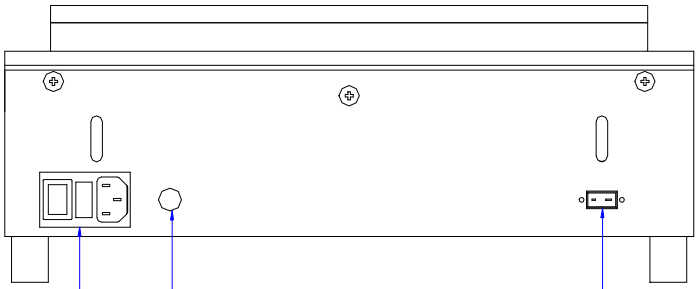

Note:
- Dimensions: Inches [Millimeters]
- Dimensions do not include hardware

INFORMATION DISCLOSED HEREIN IS THE CONFIDENTIAL PROPERTY OF TECA CORP. RECIPIENT SHALL NOT USE THE INFORMATION IN ANY UNAUTHORIZED MANNER.	UNLESS OTHERWISE SPECIFIED DIMENSIONS ARE IN INCHES TOLERANCES ARE: DECIMALS .XX +/- .XXX+/- ANGLE +/- FRACTION +/-	**THERMOELECTRIC COOLING AMERICA CORP.** AHP-1200CP SERIES ASSEMBLY	
FINISH:	MATERIAL:	DRAWN BY: AA	DRAWING # 1200-B-A249
		DATE: 06/24/05	REV LEVEL
		D6478	SCALE / MASTER: MASTER / SHEET

REV	DESCRIPTION	Date	APPROVED

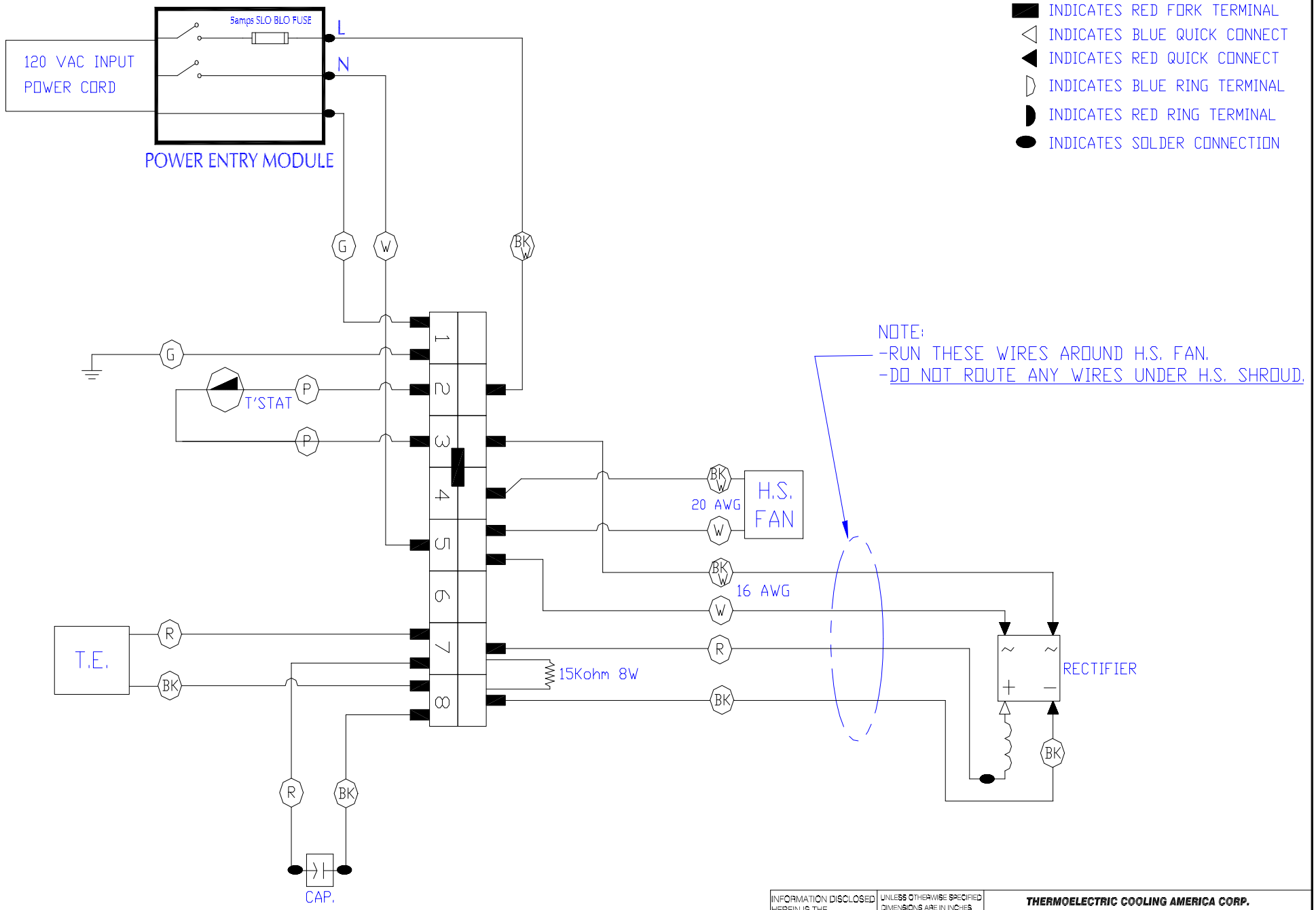

REV	DESCRIPTION	Date	APPROVED
A	Updated title block.	10/29/98	AA
B	Redrawn to reflect assembly, component locations.	12/29/98	AA
C	Replaced switch breaket by power entery module.	02/14/05	AA

INFORMATION DISCLOSED HEREIN IS THE CONFIDENTIAL PROPERTY OF TECA CORP. RECIPIENT SHALL NOT USE THE INFORMATION IN ANY UNAUTHORIZED MANNER.

UNLESS OTHERWISE SPECIFIED DIMENSIONS ARE IN INCHES TOLERANCES ARE:
DECIMALS .XX +/- .XXX+/-
ANGLE +/-
FRACTION +/-

FINISH:

MATERIAL:

THERMOELECTRIC COOLING AMERICA CORP.

AHP-1200 CP
WIRING DIAGRAM

DRAWN BY: AA
DATE: 05/24/96
D3975

DRAWING # 1200-B-E46

REV LEVEL C

SCALE

MASTER: 1200BE44

SHEET

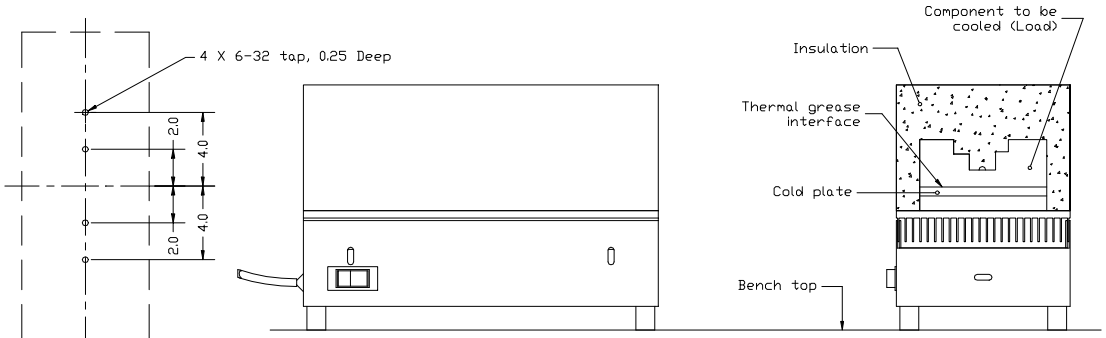

METHOD A (BENCH TOP)

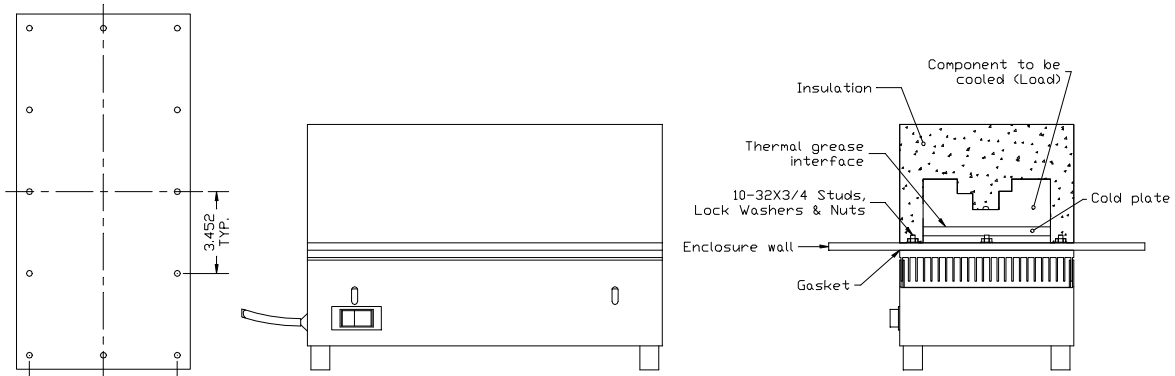

METHOD B (THRU ENCLOSURE)

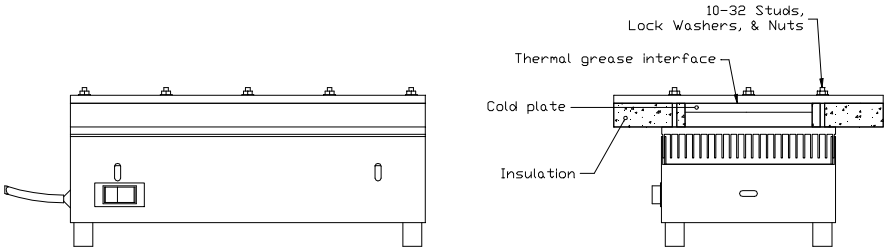

Note: Do not use this method. Over compression may cause irreversible damage to the thermoelectrics and void the warranty.

INSTALLATION INSTRUCTIONS

1- Choose Mounting Method (A or B).

2- Prepare mounting surface/component as indicated. Ideal component surface flatness is ±.001 T.I.R.

3- Spread an even, approximately 10 MIL, layer of thermal grease (Dow type 340 or equivalent) on both thermal contact surfaces (component and cold plate). A speedball rubber roller works well for this.

4- Install unit without sliding against mating surface using stainless steel screws and lock washers if available. Rotate slightly to "seat" them. Torque screws until snug. Do not overtighten.

5- Fit insulation around cold plate surfaces as required.

6- If desired, caulk insulation to seal and secure insulation.

7- Connect power per appropriate wiring diagram.

REV	DESCRIPTION	Date	APPROVED

INFORMATION DISCLOSED HEREIN IS THE CONFIDENTIAL PROPERTY OF TECA CORP. RECIPIENT SHALL NOT USE THE INFORMATION IN ANY UNAUTHORIZED MANNER.

UNLESS OTHERWISE SPECIFIED DIMENSIONS ARE IN INCHES
TOLERANCES ARE:
DECIMALS: .XX +/- .XXX +/-
ANGLE +/-
FRACTION +/-

FINISH:
MATERIAL:

THERMOELECTRIC COOLING AMERICA CORP.

AHP-1200CP
INSTALLATION INSTRUCTION

DRAWN BY: AA	DRAWING # 1200-B-F56	REV LEVEL
DATE: 05/24/00		
D5336	SCALE	MASTER: MASTER	SHEET

LIMITED WARRANTY

In the event a defect in material or workmanship is discovered in any of TECA's products within one year after the date they are delivered to Buyer, and if: (a) TECA is notified of the defect in writing by certified mail within 14 days of the date of discovery; (b) TECA may then either, at its sole discretion, inspect the product at Buyer's location, or require that the product be made available at Buyer's expense at TECA's premises for TECA's inspection within 14 days of the date of notification; and (c) the products are defective and the defects result from faulty materials and/or workmanship and not in any way from accident, misuse, misapplication, mishandling, modification, or alteration by the Buyer or the shipper, then TECA shall, at its sole option, repair or exchange defective products free of charge to Buyer, or credit to buyer the price of the defective products. ALL OTHER WARRANTIES, EXPRESS OR IMPLIED, ARE EXCLUDED, INCLUDING BUT NOT LIMITED TO THE IMPLIED WARRANTIES OF MERCHANTABILITY AND FITNESS FOR A PARTICULAR PURPOSE. IN NO EVENT SHALL TECA BE LIABLE FOR ANY CLAIM BASED UPON BREACH OF EXPRESS OR IMPLIED WARRANTY OR ANY OTHER DAMAGES WHETHER SPECIAL, INDIRECT, INCIDENTAL, CONSEQUENTIAL, LOST PROFITS, BUSINESS INTERRUPTION, OR LOSS OF BUSINESS OR CUSTOMER RELATIONSHIPS.

RETURNED GOODS, RESTOCKING CHARGES

In order to return merchandise for any reason (repair, replacement, or credit) a return authorization number must be issued by TECA. New merchandise may not be returned for credit beyond 60 days from shipment. Charges for incidental or other damages may also be made. All returned goods must be sent freight prepaid. A restocking charge of 15% will apply. On special equipment and custom modified equipment orders, additional incremental cancellation charges may be made.