Product Information Packet

Model AHP-450CPHC

24 VDC Solid State Cold/Hot Plate

Reverse Polarity Capable

Part #1-F095-1-000

Thank you for your purchase. Information has been enclosed regarding the installation, specifications, and wiring of your solid-state assembly.
Please read and follow all instructions carefully before installation. Only qualified technicians should install this equipment.

If you have any questions regarding your equipment, please do not hesitate to call us at 773-342-4900, and we will be happy to assist you. We are open from 8:00 am-4:30 pm Central Time.

Included in this packet you will find:

Product Literature and Specifications

Assembly Drawing # SK140709

Wiring Drawing # SK140720

Installation Drawing # SK140710

Warranty Information

teca

ThermoElectric Cooling America Corporation
4048 W. Schubert Avenue • Chicago, IL (U.S.A.) 60639
Ph: 773/342-4900 Fx: 773/342-0191
sales@thermoelectric.com www.thermoelectric.com

AHP-450CP | Cold/Hot Plate

Air Cooled

General Purpose 24 VDC
High Efficiency
68 Watts

FEATURES

- Flat aluminum plate (8" x 4.70") [203 x 119]
- Standard 6-32X.25 UNC threads
- Compact (only 10" x 5.76" x 4.45") [254 x 146 x 113]
- Mounts and operates in any orientation: horizontal, vertical, etc.
- Low vibration and noise
- No moving parts except fan
- Environmentally safe
- No compressor, fluorocarbons or filters
- Cools and heats via reverse polarity
- Virtually maintenance-free operation
- Pivot clean
- Weight 7 LBS. (3.2 KG)

INCLUDES

- Mounting gasket
- Mounting hardware
- Power input leads

OPTIONS

- Custom cold plate threads and/or inserts
- Flat plate without holes or threads
- Stainless steel exterior fan shroud and housing
- Custom fans: Quiet, Speed Control, Waterproof
- Use with TC-3400, TC-3500 and TC-4600 controls

PERFORMANCE RATINGS

Cooling	68 WATTS
Cooling COP	1.8
Heating	> 36 Watts

SPECIFICATIONS

MODEL	PART NUMBER	NOTES	PERFORMANCE RATING WATTS	VOLTAGE VDC	CURRENT AMPS.	TEMP. CONTROL	OPERATING AMBIENT °C
AHP-450CPHC	1-F095-1-000	Heat/Cool	68	24	1.5	None	-10/+60
AHP-450CPHC	1-F094-1-000	Heat/Cool	68	12	3	None	-10/+60

Heat function via reverse polarity (requires controller with H-Bridge)

Cold Plate- Air Cooled

AHP-450CP

ENVIRONMENTS

Bench Top, Factory, Industrial, OEM

COOLING CAPACITY

68 Watts @ 0 °C ΔT

PERFORMANCE CURVE

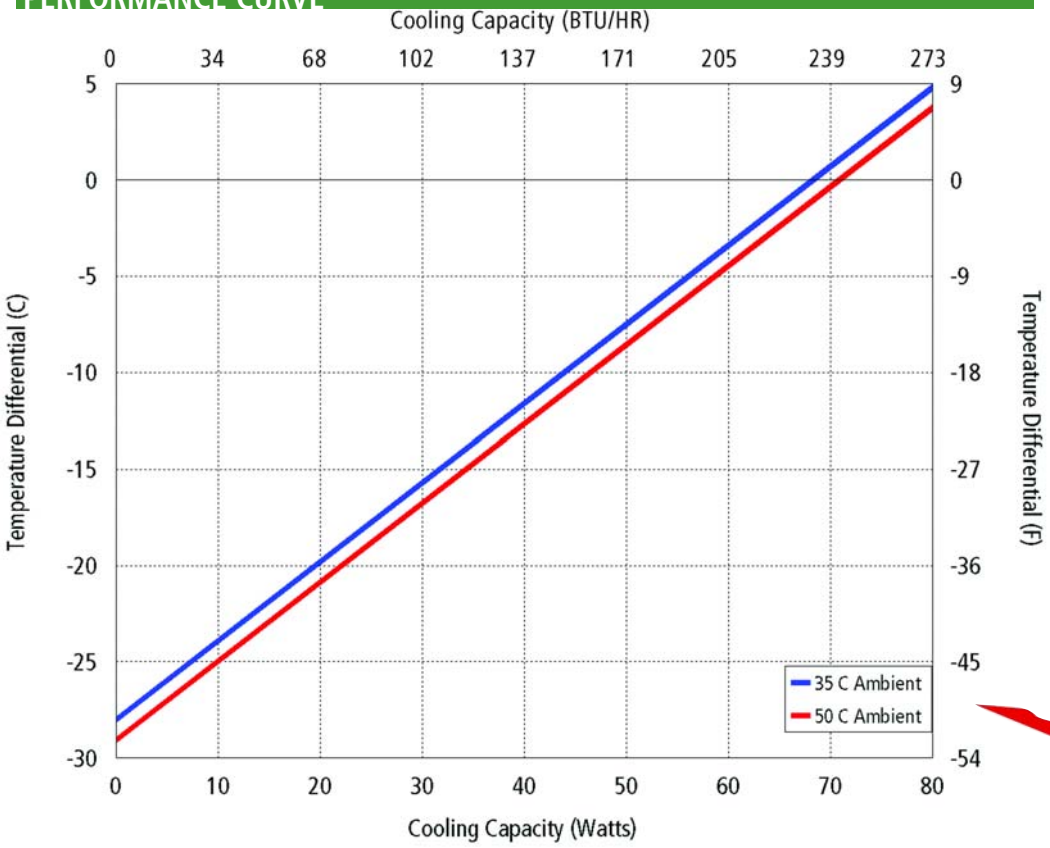

Equation of Line:	y=ΔT(°C)	x=Capacity (Watts)
Ambient Temp	**35°C**	**50°C**
Cold Plate	y=0.41x-28	y=0.41x-29

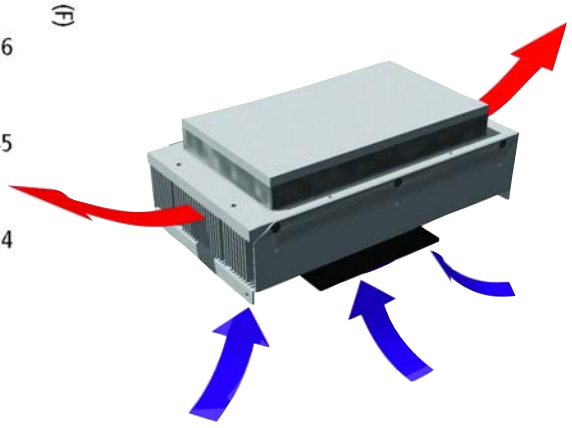

Air Flow Pattern

DIMENSIONS

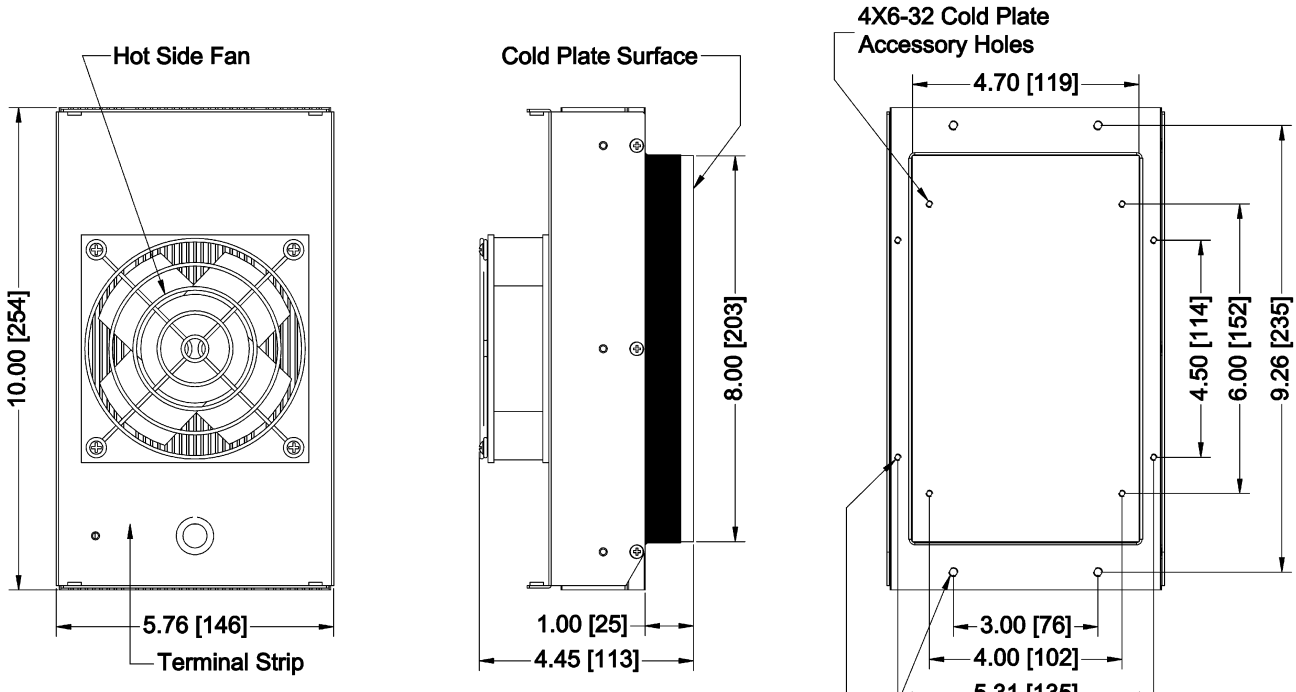

Dimension does not include hardware and sealant
Hardware and gasket included but not shown
Dimensions: Inches [Millimeters]

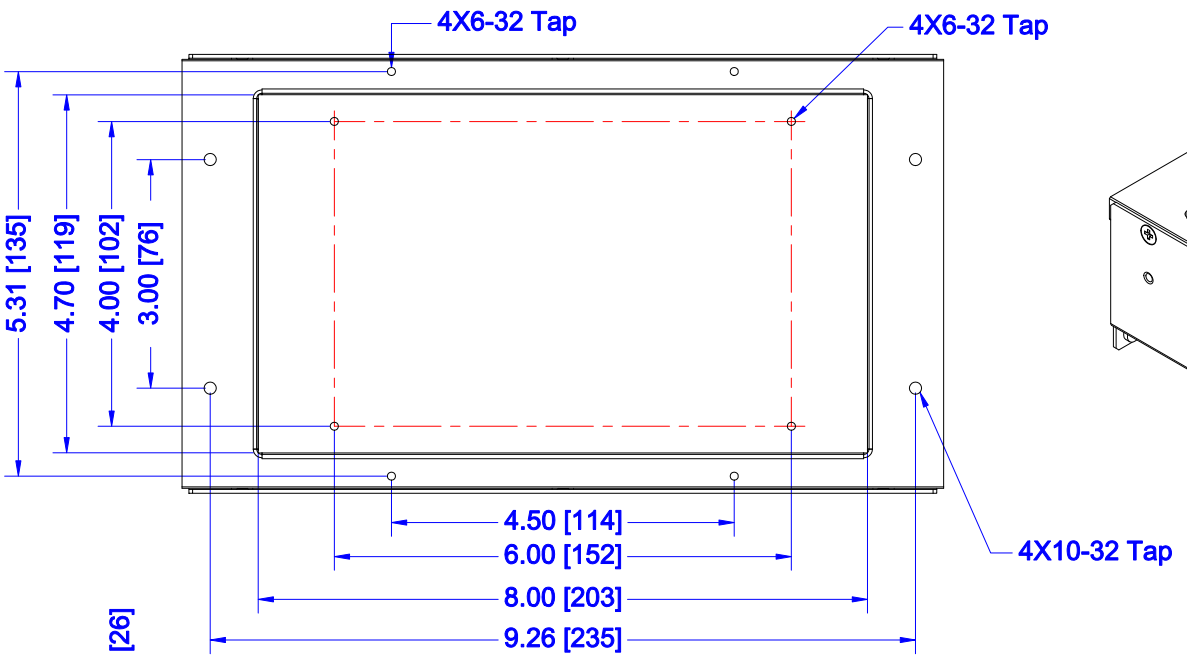

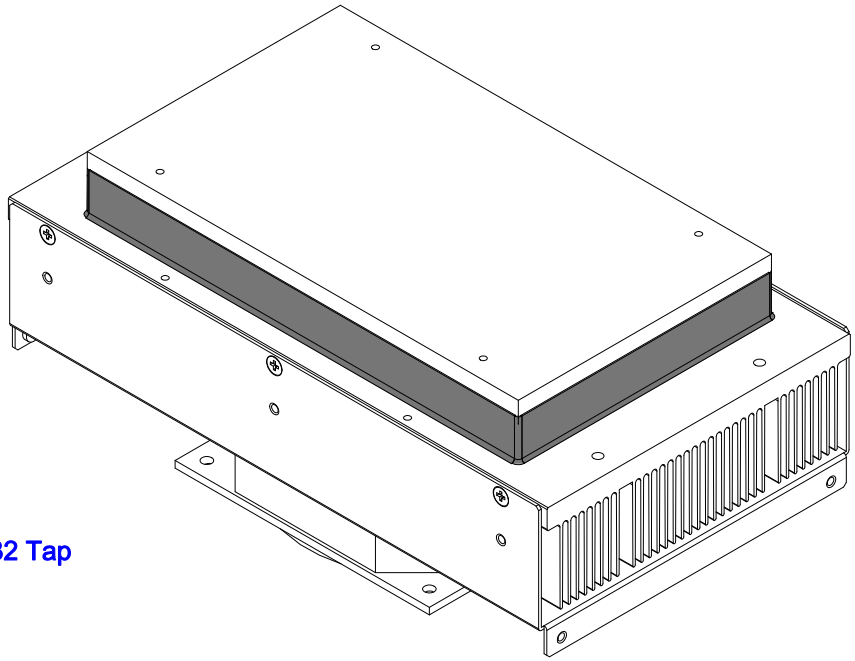

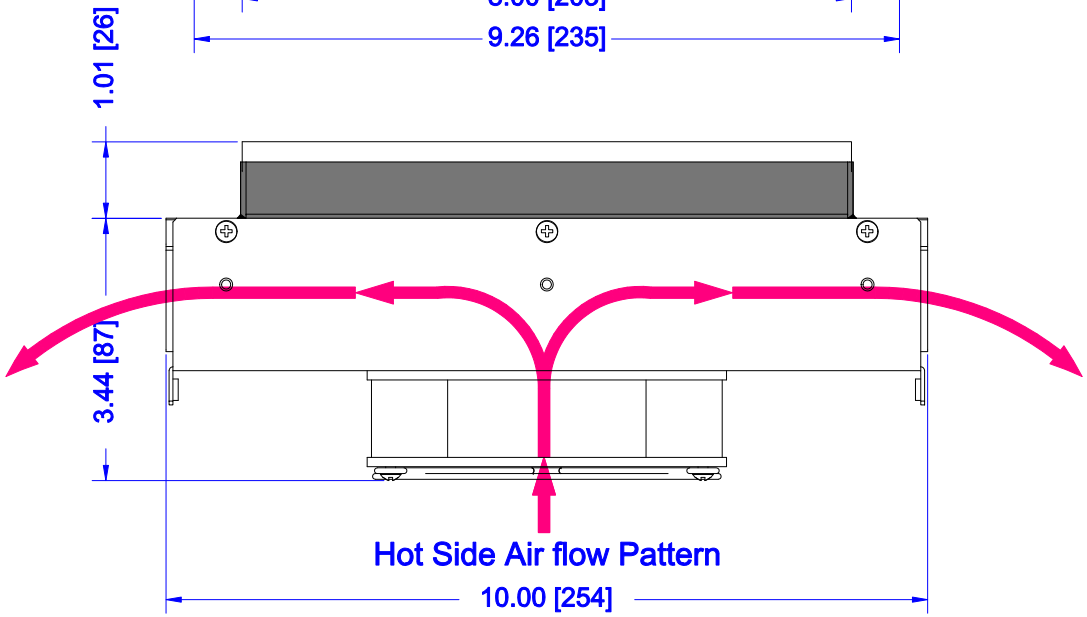

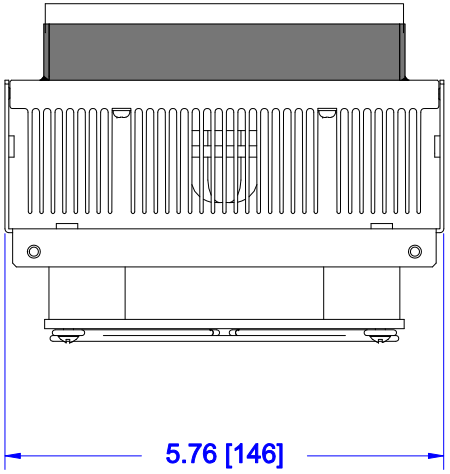

REV	DESCRIPTION	Date	APPROVED

INFORMATION DISCLOSED HEREIN IS THE CONFIDENTIAL PROPERTY OF TECA CORP. RECIPIENT SHALL NOT USE THE INFORMATION IN ANY UNAUTHORIZED MANNER.

UNLESS OTHERWISE SPECIFIED DIMENSIONS ARE IN INCHES
TOLERANCES ARE:

DECIMALS	ANGLE
.XX +/-	+/-
.XXX+/-	FRACTION +/-

FINISH:

MATERIAL:

THERMOELECTRIC COOLING AMERICA CORP.

AHP-400CP, AHP-500CP SERIES
THERMOELECTRIC COLD PLATE

DRAWN BY: AA	DRAWING # SK140709	REV LEVEL
DATE: 07/02/2014		
D9305	SCALE / MASTER: MASTER	SHEET

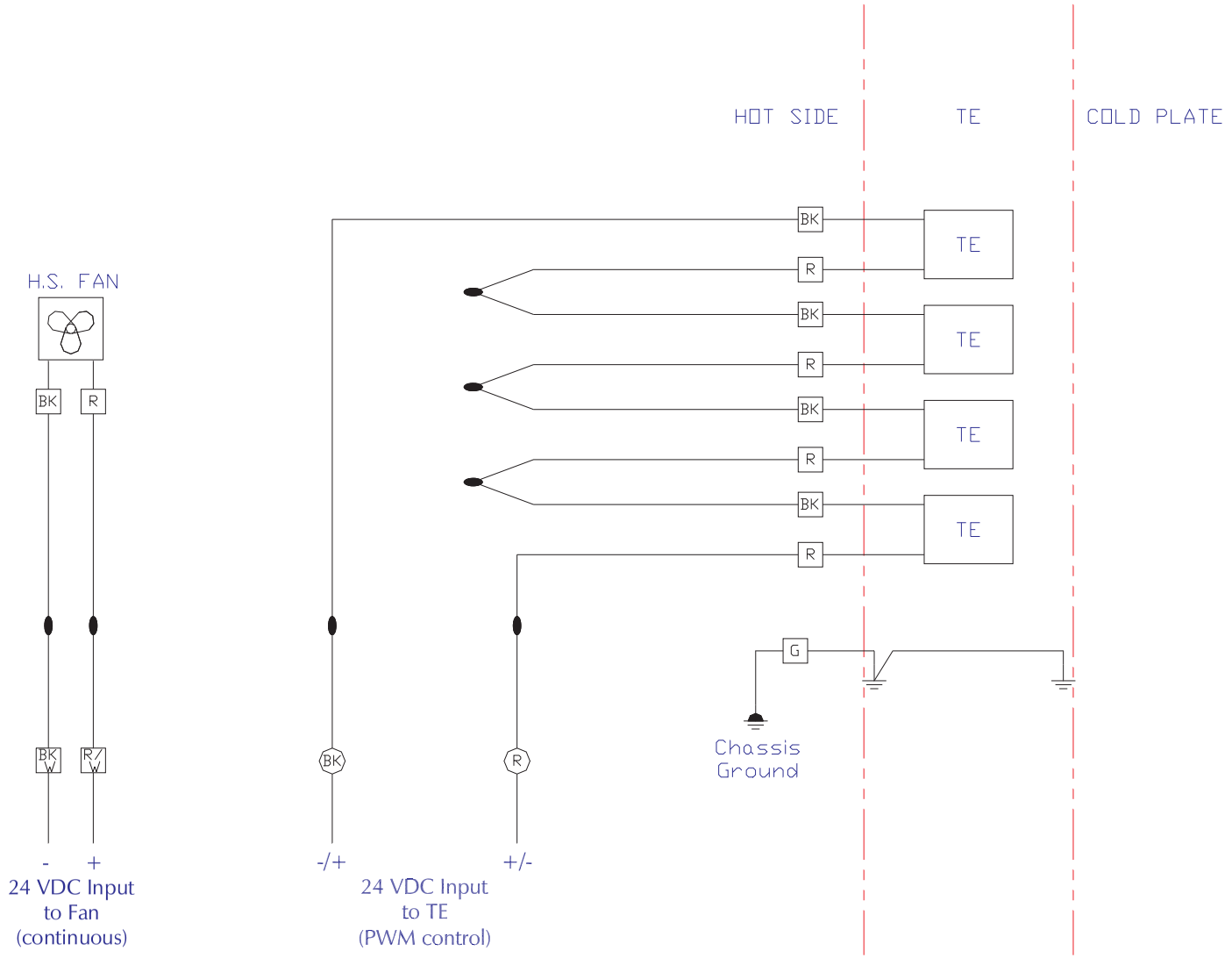

Red Ring Terminals
Solder & Shrink Tube Connection

22 AWG Wires
18 AWG Wires

REV	DESCRIPTION	Date	APPROVED

INFORMATION DISCLOSED HEREIN IS THE CONFIDENTIAL PROPERTY OF TECA CORP. RECIPIENT SHALL NOT USE THE INFORMATION IN ANY UNAUTHORIZED MANNER.

UNLESS OTHERWISE SPECIFIED DIMENSIONS ARE IN INCHES
TOLERANCES ARE:
DECIMALS .XX +/- .XXX+/-
ANGLE +/-
FRACTION +/-

FINISH:
MATERIAL:

THERMOELECTRIC COOLING AMERICA CORP.

AHP-450CPHC (24 VDC)
WIRING DIAGRAM
REVERSE POLARITY CAPABLE

DRAWN BY: AA
DATE: 07/09/2014
D9316
DRAWING # SK140720
SCALE
MASTER: MASTER
REV LEVEL
SHEET

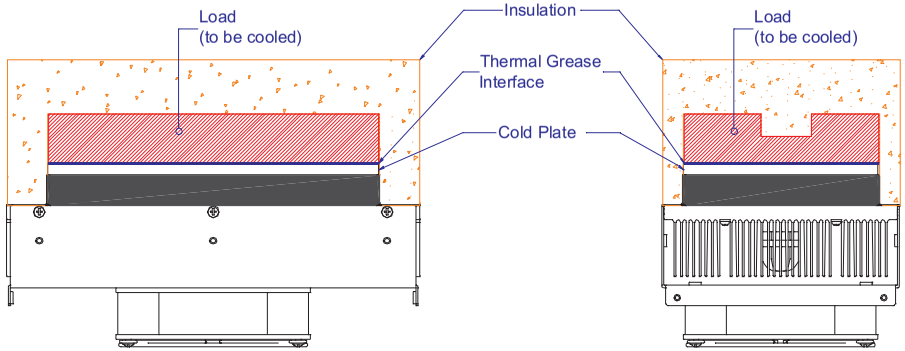

METHOD A

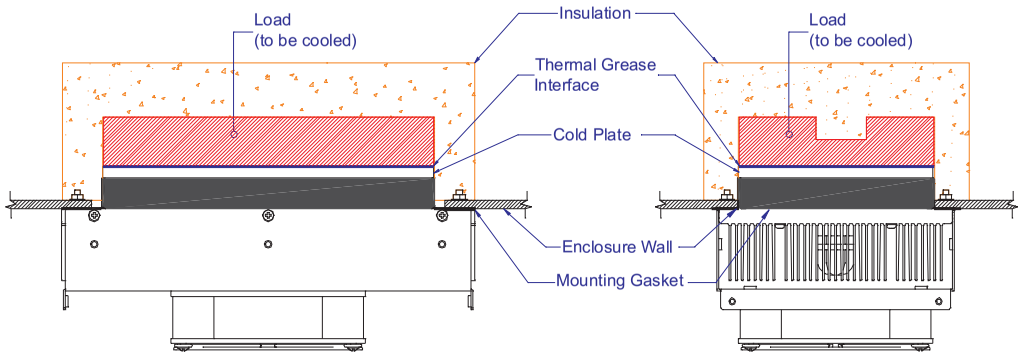

METHOD B

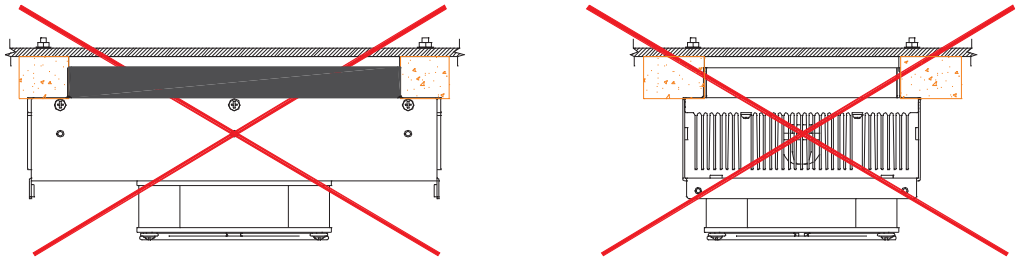

Note: Do not use this method.
Over compression may cause irreversible damage to the thermoelectrics and void the warranty.

INSTALLATION INSTRUCTIONS

1- Choose Mounting Method (A or B).

2- Prepare mounting surface/component as indicated. Ideal component surface flatness is ±.001 T.I.R.

3- Spread an even, approximately 10 MIL, layer of thermal grease (Dow type 340 or equivalent) on both thermal contact surfaces (component and cold plate). A speedball rubber roller works well for this.

4- Install unit without sliding against mating surface, rotate slightly to "seat" them.

5- Fit insulation around cold plate surfaces as required.

6- If desired, caulk insulation to seal and secure insulation.

7- Connect power per appropriate wiring diagram.

REV	DESCRIPTION	Date	APPROVED

UNLESS OTHERWISE SPECIFIED DIMENSIONS ARE IN INCHES
TOLERANCES ARE:
DECIMALS .XX +/- .XXX+/-
ANGLE +/-
FRACTION +/-

FINISH:
MATERIAL:

THERMOELECTRIC COOLING AMERICA CORP.

AHP-400C0, 500CP, 600CP SERIES
INSTALLATION INSTRUCTIONS

DRAWN BY: AA
DATE: 07/03/2014
D9306
DRAWING # SK140710
SCALE
MASTER: SK140709
REV LEVEL
SHEET

LIMITED WARRANTY

In the event a defect in material or workmanship is discovered in any of TECA's products within one year after the date they are delivered to Buyer, and if: (a) TECA is notified of the defect in writing by certified mail within 14 days of the date of discovery; (b) TECA may then either, at its sole discretion, inspect the product at Buyer's location, or require that the product be made available at Buyer's expense at TECA's premises for TECA's inspection within 14 days of the date of notification; and (c) the products are defective and the defects result from faulty materials and/or workmanship and not in any way from accident, misuse, misapplication, mishandling, modification, or alteration by the Buyer or the shipper, then TECA shall, at its sole option, repair or exchange defective products free of charge to Buyer, or credit to buyer the price of the defective products. ALL OTHER WARRANTIES, EXPRESS OR IMPLIED, ARE EXCLUDED, INCLUDING BUT NOT LIMITED TO THE IMPLIED WARRANTIES OF MERCHANTABILITY AND FITNESS FOR A PARTICULAR PURPOSE. IN NO EVENT SHALL TECA BE LIABLE FOR ANY CLAIM BASED UPON BREACH OF EXPRESS OR IMPLIED WARRANTY OR ANY OTHER DAMAGES WHETHER SPECIAL, INDIRECT, INCIDENTAL, CONSEQUENTIAL, LOST PROFITS, BUSINESS INTERRUPTION, OR LOSS OF BUSINESS OR CUSTOMER RELATIONSHIPS.

RETURNED GOODS, RESTOCKING CHARGES

In order to return merchandise for any reason (repair, replacement, or credit) a return authorization number must be issued by TECA. New merchandise may not be returned for credit beyond 60 days from shipment. Charges for incidental or other damages may also be made. All returned goods must be sent freight prepaid. A restocking charge of 15% will apply. On special equipment and custom modified equipment orders, additional incremental cancellation charges may be made.